Product folder

Meijer Holland | a **Jansen&Heuning** brand | Duinkerkenstraat 11 | 9723 BN Groningen | +31 (0)50 - 312 64 48 | info@meijerholland.nl | www.meijerholland.com

Content

Meijer Holland bale handling systems for big bales

- Fred bale grab 2
- Rambo bale grab 4
- Collectors behind the bale press (Flintstone & Windrow) 6

Meijer Holland bale handling systems for small bales

- Collectors behind the bale press (Limo Hydra & Limo Mecha) 7
- Meijer KM bale grab 8

Meijer Holland bale handling systems for big wrapped bales

- Jumbo CKM bale grab 9
- Jumbo VR bale grab 11

The Fred is the Meijer Holland bale grab to stack big bales. Available in six different versions, the Fred is the perfect grab when it comes to stacking and moving big bales of hay and straw. Special versions are available on request.

Fred

- suitable for front loader, wheel loader, telescopic handler, forklift or crane
- all bales are grabbed by the hooks
- the special developed hook of high quality steel turns deep into the bale and pulls the bales against the main frame
- if the grab is tilted forwards, the bales do not fall off, thanks to the rotating axles with hooks

Type	Number of bales	Width	Height	Weight	Number of hooks	Axle Ø
Fred 2-3	2x 90 cm high 3x 70 cm high (telescopic beams needed)	165 cm	125 cm	310 kg	6	45 mm
Fred 3-4	3x 90 cm high 4x 70 cm high	165 cm	230 cm	455 kg	12	45 mm

Fred Heavy Duty

- suitable for front loader, wheel loader, telescopic handler, forklift or crane
- designed for intensive use
- removable axles, which makes wearing parts replaceable
- cylinder mounting with special bolt with lubrication groove
- reinforced lower corners
- heavy cylinder

Type	Number of bales	Width	Height	Weight	Number of hooks	Axle Ø
Fred 3-4 Heavy Duty	4x 90 cm high 5x 70 cm high (telescopic beams needed)	175 cm	230 cm	515 kg	12	50 mm
Fred 4-5 Heavy Duty	4x 90 cm high 5x 70 cm high	175 cm	280 cm	525 kg	12	50 mm

Super Fred

- suitable for fork lift truck or tele truck (min. lifting power 4 tons)
- with tilting system to load vertically and horizontally
- 6/2 electric valve to choose for grabbing or tilting

Type	Number of bales	Width	Height	Weight	Number of hooks	Axle Ø
Super Fred 3-4	3x 90 cm high 4x 70 cm high	170 cm	230 cm	680 kg	12	45 mm
Super Fred 3-4 Heavy Duty	4x 90 cm high 5x 70 cm high (telescopic beams needed)	170 cm	230 cm	760 kg	12	50 mm

Options Fred series

- removable brackets
- 3 removable frontloader tines (length after assembly 950 mm or 660 mm)
- hydraulic hoses and couplings
- overpressure relief valve for pressure higher than 180 bar or for bales with density higher than 200 kg/m³

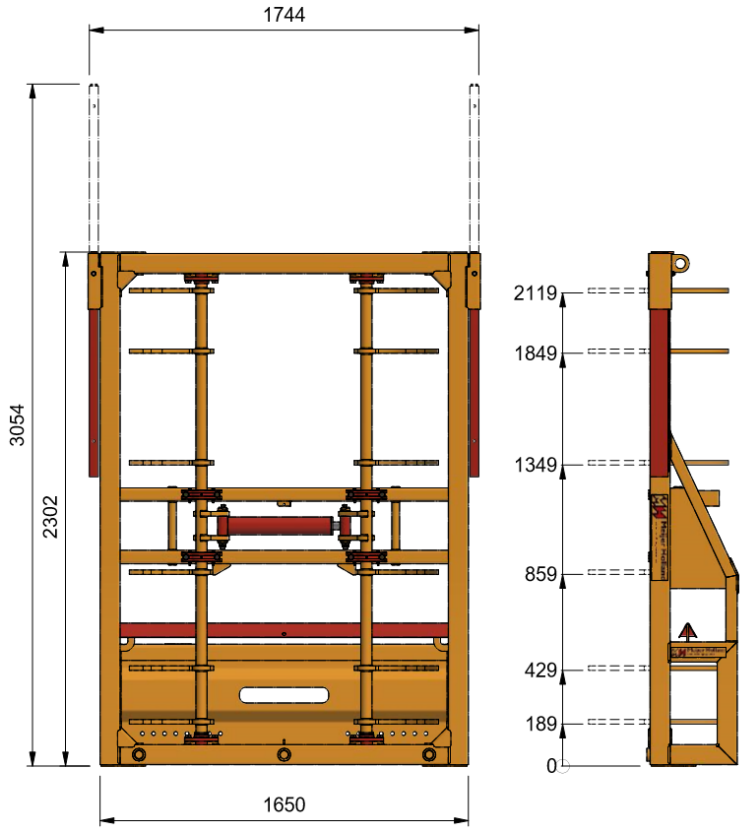

Fred 3-4 Heavy Duty

The Rambo of Meijer Holland collects big straw or hay bales one by one and loads them together. Standard available in ten versions. The Rambo 2, 2D, 3, 4, 4D, 5, 6, 6K, 6KD and 7K. Special versions are available on request.

Rambo

- suitable for front loader, wheel loader or telescopic handler; depending on type of bale grab
- hydraulic valves to grab bales separately with only one hydraulic circuit
- the bales are released simultaneously
- for each bale the Rambo has one cylinder and four hooks
- the hooks pull the bales tight to the main frame, which secures a safe way of working

Type	Number of bales	Width	Height	Weight	Number of hooks	Number of hydraulic valves
Rambo 2	2	200 cm	85 cm	300 kg	8	1
Rambo 3	3	290 cm	85 cm	785 kg	12	2
Rambo 4	4	440 cm	85 cm	1150 kg	16	3
Rambo 5	5	610 cm	85 cm	1500 kg	20	4
Rambo 6	6	740 cm	85 cm	1900 kg	24	5

Rambo foldable

- suitable for heavy wheel loaders from 14 tons operating weight
- foldable main frame to transport the grab on the road
- 6/2 electric valve to choose for grabbing or folding
- overpressure relief valve

Type	Number of bales	Width	Height	Weight	Number of hooks	Number of hydraulic valves
Rambo 6K	6	690 cm folded: 300 cm	85 cm folded: 290 cm	2200 kg	24	5
Rambo 7K	7	780 cm folded: 300 cm	85 cm folded: 320 cm	2490 kg	28	6

Rambo transversely

- grabs the bales transversely
- suitable for front loader, wheel loader or telescopic handler; depending on type of bale grab
- works perfectly in combination with the Fred bale grab. On the field collecting with the Rambo D and in the warehouse unloading with the Fred.

Type	Number of bales	Width	Height	Weight	Number of hooks	Number of hydraulic valves
Rambo 2D	2	100 cm	85 cm	500 kg	12	1
Rambo 4D	4	450 cm	85 cm	1200 kg	16	3
Rambo 6KD	6	690 cm folded: 300 cm	85 cm folded: 290 cm	2200 kg	24	5

Options Rambo series

- removable brackets
- hydraulic hoses and couplings
- overpressure relief valve (standard on 6K, 7K and 6KD)

Connected behind the big bale press, the bale collectors of Meijer Holland optimize the collection of big bales on the field.

Flintstone

The Flintstone is the right machine for collecting big bales. Connected with a platform behind the press, the Flintstone will stack 2 bales on the field.

- processing of big bales is twice as fast
- complete mechanical system powered by the force of the press
- connected with platform behind the press
- two steering rods on the arms ensure guidance of the bales
- suitable for various bale heights, adjustable at the castor fork and hanging of roller conveyor
- optimal functioning in combination with Fred bale grab

Type	Number of bales	Dimensions bales (lxwxh)	Platform height	Length	Width	Weight
Flintstone	2	240x120x70 cm 240x120x90 cm	111 cm	430 cm	202 cm	900 kg
Flintstone for bales 80 cm width	2	240x80x70 cm 240x80x90 cm	85 cm	430 cm	170 cm	800 kg

Windrow

Connected at the back of the press, the Windrow lays down bales of separate rows in 1 line, making it more efficient to collect them driving cross wise

- rigid behind the press with one castor fork
- the last 1,5 meter of the Windrow hinges down hydraulically
- sensor gives signal when bale can be discharged
- efficient processing of bales, because they are in 1 line on the field
- less tracking, so less damage to soil structure
- optimal functioning in combination with Fred bale grab
- hinged part fully foldable for transport

Type	Number of bales	Dimensions bales (lxwxh)	Length	Width	Weight
Windrow	2	240x120x90 cm	400 cm	170 cm	600 kg

Meijer Holland has an optimal system for the quickly processing of small bales. Read below more about this collect and grab combination. Special versions are available on request.

Limo Hydra

The Limo Hydra is a hydraulic collector for straw or hay bales. Connected to a platform at the back of a small bale press, the Limo Hydra lays properly down a package of bales on the field.

- suitable for bale presses with high capacity
- bales are not dragged over the ground
- hydraulic drive of rollers, further operation fully mechanical
- controller to set up speed spiral rollers
- oil use: ca. 30-35 litres per minute
- no spray trails thanks to wide wheels
- platform for connection to bale press
- trouble-free operation

Type	Number of bales	Dimensions bales (lxwxh)	Min. bale weight	Length	Width	Weight
Limo Hydra 8	8	105x50x40 cm	15 kg	326 cm	265 cm	680 kg
Limo Hydra 12M	12	85x50x40 cm	15 kg	365 cm	255 cm	750 kg
Limo Hydra 15M	15	85x50x40 cm	15 kg	365 cm	300 cm	900 kg

Limo Mecha

The Limo Mecha is a mechanical collector for 8 straw or hay bales. Connected behind a small bale press, the Limo Mecha lays properly down a package of bales on the field.

- suitable for clay and sandy soil
- operation fully mechanical
- the control system consists only of three springs on three valves with the soil as the drive
- connected behind bale press with narrowing platform. This slows down the bale, which ensures a consistent flow into the bale collector.
- trouble-free and easy operation

Type	Number of bales	Dimensions bales (lxwxh)	Length	Width	Weight
Limo Mecha 8	8	105x50x40 cm	548 cm	270 cm	400 kg

Meijer KM

The Meijer KM is a bale grab to pick up small straw or hay bales simultaneously and to unload at destination.

- suitable for frontloader, telescopic handler or forklift
- with two-way hydraulic cylinder, making springs not necessary
- red guidance arm pushes bales against each other
- good to be used in combination with Limo Hydra or Limo Mecha bale collector

Type	Number of bales	Dimensions bales (lxwxh)	Length	Width	Height	Weight	Number of hooks
Meijer KM 8	8	105x50x40 cm	217 cm	200 cm	60 cm	264 kg	18
Meijer KM 12M	12	85x50x40 cm	265 cm	200 cm	60 cm	400 kg	26
Meijer KM 15M	15	85x50x40 cm	265 cm	245 cm	60 cm	500 kg	34
Meijer KM 16	16	105x50x40 cm	217 cm	400 cm folded: 200 cm	60 cm	550 kg	36

Options Limo

- lighting set
- following car with mechanical valve
- following car with hydraulic valve

Options Meijer KM

- removable brackets
- hydraulic hoses and couplings

The Jumbo CKM of Meijer Holland is designed for grabbing wrapped bales (round or rectangular) from the top side. However, also solid hay or straw bales can be grabbed with the CKM bale grab. The Jumbo CKM has three different types: the CKM 1, 2 and 3.

Jumbo CKM 1

- suitable for front loader, wheel loader or telescopic handler
- turning (red) roller at the top of the arm for the correct movement of the bale
- no damages to the foil of the bales
- a security valve holds the bales even when the oil pressure drops
- heavy grab arms from thick wall pipe

Type	Number of bales	Bale dimensions	Max. capacity	Width	Height	Weight
Jumbo CKM 1	1	till 125 cm wide till 120 cm high	800 kg	100 cm	100 cm	250 kg

Jumbo CKM 2

- suitable for front loader, wheel loader or telescopic handler
- two adjustable arms to grab the bale from the top
- the two bales are released simultaneously
- one wheel, which triggers the hydraulic valve, gives the possibility to grab each separate bale with only one hydraulic circuit
- optional: 6/2 electric valve controlling both arms separately, instead of hydraulic valve

Type	Number of bales	Bale dimensions	Max. capacity	Width	Height	Weight	Number of hydraulic valves
Jumbo CKM 2	2	till 125 cm wide till 120 cm high	1600 kg	265 cm	100 cm	560 kg	0 or 1 (optional)

Jumbo CKM 3

- suitable for wheel loader or telescopic handler
- three adjustable arms to take up the bales from the top
- the three bales are released simultaneously
- grab arms are telescopic and can be adjusted so that the three bales are put tight together (stroke of 70 cm)
- plastic wearing profiles on telescopic guidance parts
- 6/2 electric valve to choose for grabbing or telescoping
- two wheels, which trigger the hydraulic valves, give the possibility to grab each separate bale with only one hydraulic circuit
- overpressure relief valve

Type	Number of bales	Bale dimensions	Max. capacity	Width	Height	Weight	Number of hydraulic valves
Jumbo CKM 3	3	till 125 cm wide till 120 cm high	2400 kg	300 cm	115 cm	980 kg	2

Options Jumbo CKM series

- triangle shaped grab arms with wide roller
- removable brackets
- hydraulic hoses and couplings

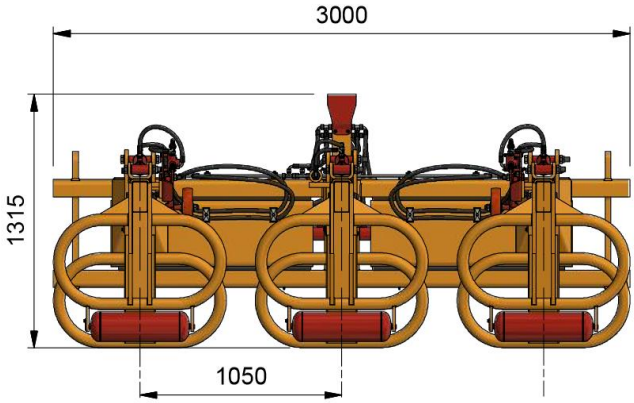

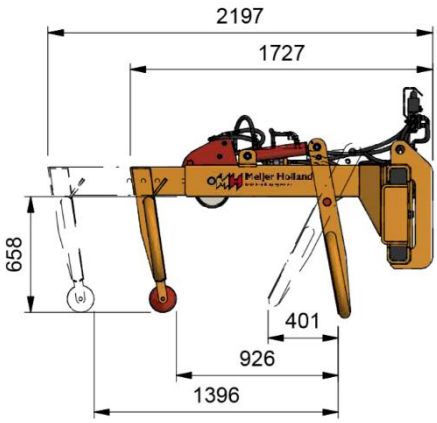

The Jumbo VR of Meijer Holland is designed for grabbing wrapped bales (round or rectangular) from the side. The Jumbo VR is standard available for 2 or 4 bales: VR 2 and VR 4.

Jumbo VR

- suitable for wheel loader or telescopic handler
- very heavily built
- the arms slide under pressure from 2 cylinders through 2 U-profiles.
- the cylinders are in a line; this makes the bale grab even stronger and very suitable for heavy users
- plastic wearing profiles on the extending parts to prevent wear
- no damage to the bale foil thanks to two specially developed arms
- overpressure relief valve

Type	Number of bales	Work wide	Max. capacity	Width	Height	Weight
Jumbo VR 2	2	95 to 185 cm or 111 to 201 cm	1.500 kg	190 cm	62 cm incl. red attachment: 120 cm	425 kg
Jumbo VR 4	4	125 to 180 cm	3.000 kg	300 cm	130 cm	800 kg

Options Jumbo VR series

- removable brackets
- hydraulic hoses and couplings